SH MED02-2
Medical Wall-Mounted Workstation

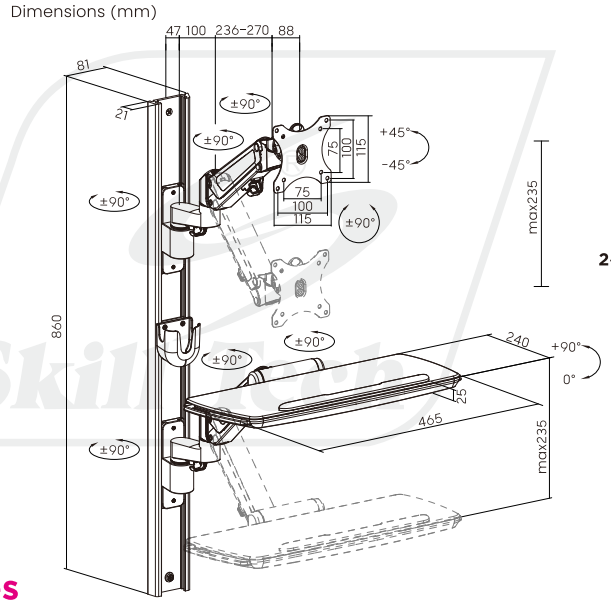

Screen Size
17" ~ 43"

VESA Compatible
75x75 100x100

RATED

Monitor
2-12kg/4.4-26.4lbs

RATED

Keyboard
2kg/4.4lbs

Tilt Range
+45° ~ -45°

Swivel Range
+90° ~ -90°

Screen Rotation
+90° ~ -90°

Profile to Wall
135-505mm/ 5.3"-19.9"

Cable Management

Wall mount design enhances healthcare space to promote serviceability and efficiency.

Large tray surface with stopper for keyboard.
Integrated sliding mouse pad enlarges the worksurface .

Convenient storage bracket for mouse or scanner.